Centre Number	Candidate Number	Name

CAMBRIDGE INTERNATIONAL EXAMINATIONS
General Certificate of Education
Advanced Subsidiary Level and Advanced Level

PHYSICS **9702/02**

Paper 2

October/November 2003

1 hour

Candidates answer on the Question Paper.
No Additional Materials are required.

READ THESE INSTRUCTIONS FIRST

Write your Centre number, candidate number and name on all the work you hand in.
Write in dark blue or black pen in the spaces provided on the Question Paper.
You may use a soft pencil for any diagrams, graphs or rough working.
Do not use staples, paper clips, highlighters, glue or correction fluid.

Answer **all** questions.
The number of marks is given in brackets [ ] at the end of each question or part question.
You may lose marks if you do not show your working or if you do not use appropriate units.

If you have been given a label, look at the details. If any details are incorrect or missing, please fill in your correct details in the space given at the top of this page.

Stick your personal label here, if provided.

For Examiner's Use	
1	
2	
3	
4	
5	
6	
7	
Total	

This document consists of **20** printed pages.

© UCLES 2003
UNIVERSITY of CAMBRIDGE
Local Examinations Syndicate

Data

speed of light in free space,	$c = 3.00 \times 10^{8}\ \text{m s}^{-1}$
permeability of free space,	$\mu_0 = 4\pi \times 10^{-7}\ \text{H m}^{-1}$
permittivity of free space,	$\epsilon_0 = 8.85 \times 10^{-12}\ \text{F m}^{-1}$
elementary charge,	$e = 1.60 \times 10^{-19}\ \text{C}$
the Planck constant,	$h = 6.63 \times 10^{-34}\ \text{J s}$
unified atomic mass constant,	$u = 1.66 \times 10^{-27}\ \text{kg}$
rest mass of electron,	$m_e = 9.11 \times 10^{-31}\ \text{kg}$
rest mass of proton,	$m_p = 1.67 \times 10^{-27}\ \text{kg}$
molar gas constant,	$R = 8.31\ \text{J K}^{-1}\ \text{mol}^{-1}$
the Avogadro constant,	$N_A = 6.02 \times 10^{23}\ \text{mol}^{-1}$
the Boltzmann constant,	$k = 1.38 \times 10^{-23}\ \text{J K}^{-1}$
gravitational constant,	$G = 6.67 \times 10^{-11}\ \text{N m}^2\ \text{kg}^{-2}$
acceleration of free fall,	$g = 9.81\ \text{m s}^{-2}$

Formulae

uniformly accelerated motion, $s = ut + \frac{1}{2}at^2$
$v^2 = u^2 + 2as$

work done on/by a gas, $W = p\Delta V$

gravitational potential, $\phi = -\frac{Gm}{r}$

simple harmonic motion, $a = -\omega^2 x$

velocity of particle in s.h.m., $v = v_0 \cos \omega t$
$v = \pm \omega \sqrt{(x_0^2 - x^2)}$

resistors in series, $R = R_1 + R_2 + \ldots$

resistors in parallel, $1/R = 1/R_1 + 1/R_2 + \ldots$

electric potential, $V = \frac{Q}{4\pi\epsilon_0 r}$

capacitors in series, $1/C = 1/C_1 + 1/C_2 + \ldots$

capacitors in parallel, $C = C_1 + C_2 + \ldots$

energy of charged capacitor, $W = \frac{1}{2}QV$

alternating current/voltage, $x = x_0 \sin \omega t$

hydrostatic pressure, $p = \rho g h$

pressure of an ideal gas, $p = \frac{1}{3}\frac{Nm}{V}\langle c^2 \rangle$

radioactive decay, $x = x_0 \exp(-\lambda t)$

decay constant, $\lambda = \frac{0.693}{t_{\frac{1}{2}}}$

critical density of matter in the Universe, $\rho_0 = \frac{3H_0^2}{8\pi G}$

equation of continuity, $Av = \text{constant}$

Bernoulli equation (simplified), $p_1 + \frac{1}{2}\rho v_1^2 = p_2 + \frac{1}{2}\rho v_2^2$

Stokes' law, $F = Ar\eta v$

Reynolds' number, $R_e = \frac{\rho v r}{\eta}$

drag force in turbulent flow, $F = Br^2\rho v^2$

For Examiner's Use

Answer **all** the questions in the spaces provided.

1 **(a)** One of the equations of motion may be written as

$$v^2 = u^2 + 2as.$$

(i) Name the quantity represented by the symbol a.

.....

(ii) The quantity represented by the symbol a may be either positive or negative. State the significance of a negative value.

.....

[2]

For Examiner's Use

(b) A student investigates the motion of a small polystyrene sphere as it falls from rest alongside a vertical scale marked in centimetres. To do this, a number of flash photographs of the sphere are taken at 0.1 s intervals, as shown in Fig. 1.1.

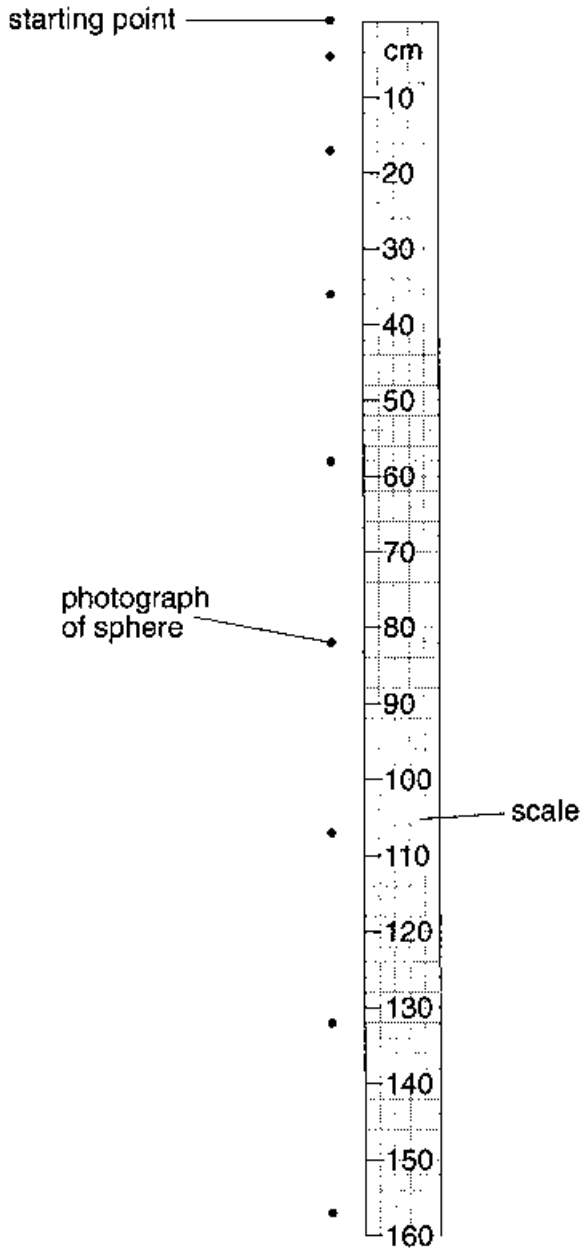

Fig. 1.1

The first photograph is taken at time $t = 0$.

By reference to Fig. 1.1,

(i) briefly explain how it can be deduced that the sphere reaches a constant speed,

.....

.....

[Turn over

For Examiner's Use

(ii) determine the distance that the sphere has fallen from rest during a time of

1. 0.7 s,

distance = ... cm

2. 1.1 s.

distance = ... cm
[4]

(c) The student repeats the experiment with a lead sphere that falls with constant acceleration and does not reach a constant speed.

Determine the number of flash photographs that will be observed against the 160 cm scale.

Include in your answer the photograph obtained at time $t = 0$.

number = ... [3]

For Examiner's Use

2 **(a)** Distinguish between the mass of a body and its weight.

mass .....

.....

weight .....

..... [3]

(b) State two situations where a body of constant mass may experience a change in its apparent weight.

1. .....

.....

2. .....

..... [2]

[Turn over

For Examiner's Use

3 **(a)** Define the *moment* of a force.

.....

..... [2]

(b) State the two conditions necessary for a body to be in equilibrium.

1. .....

.....

2. .....

..... [2]

(c) Two parallel strings S_1 and S_2 are attached to a disc of diameter 12 cm, as shown in Fig. 3.1.

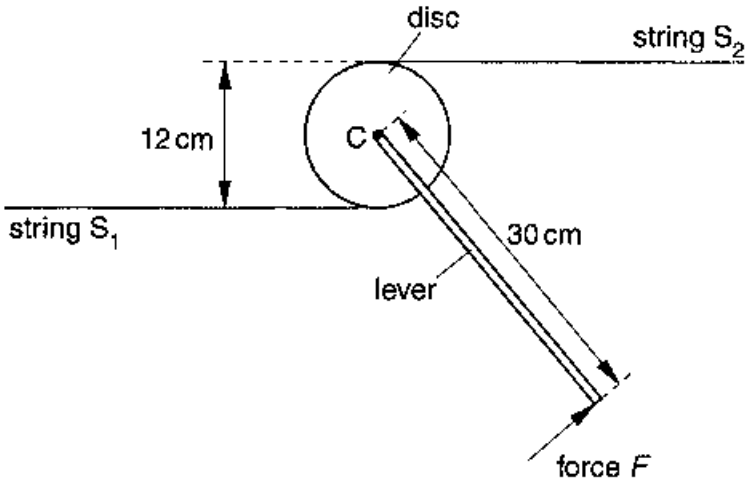

Fig. 3.1

The disc is free to rotate about an axis normal to its plane. The axis passes through the centre C of the disc.

A lever of length 30 cm is attached to the disc. When a force F is applied at right angles to the lever at its end, equal forces are produced in S_1 and S_2. The disc remains in equilibrium.

(i) On Fig. 3.1, show the direction of the force in each string that acts on the disc. [1]

(ii) For a force F of magnitude 150 N, determine

1. the moment of force F about the centre of the disc,

moment = ... N m

2. the torque of the couple produced by the forces in the strings,

torque = ... N m

3. the force in S_1.

force = ... N

[4]

4 **(a)** Fig. 4.1 shows the variation with time t of the displacement x of one point in a progressive wave.

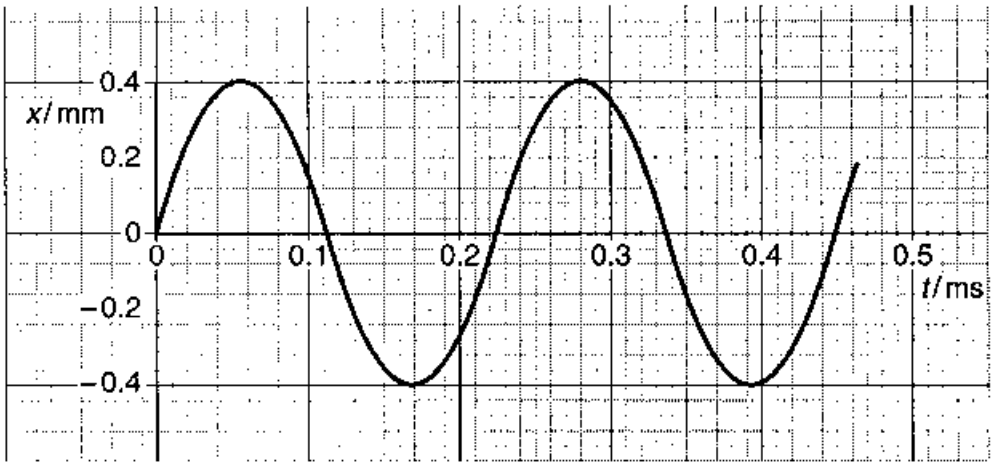

Fig. 4.1

Fig. 4.2 shows the variation with distance d along the same wave of the displacement x.

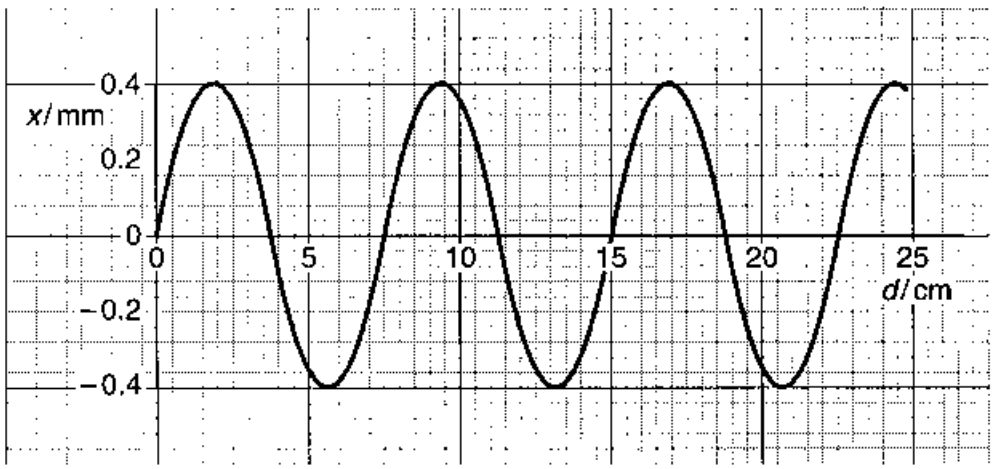

Fig. 4.2

(i) Use Figs. 4.1 and 4.2 to determine, for this wave,

1. the amplitude,

amplitude = ... mm

2. the wavelength,

wavelength = ... m

For Examiner's Use

3. the frequency,

frequency = ... Hz

4. the speed.

speed = ... $m\,s^{-1}$

[6]

(ii) On Fig. 4.2, draw a second wave having the same amplitude but half the frequency as that shown. [1]

For Examiner's Use

(b) Light of wavelength 590 nm is incident at right angles to a diffraction grating having 5.80×10^5 lines per metre, as illustrated in Fig. 4.3.

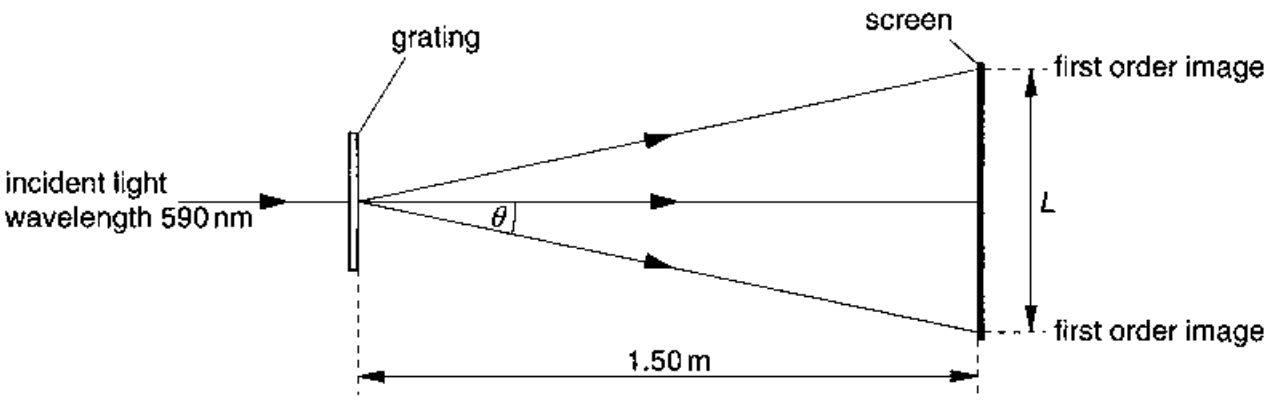

Fig. 4.3

A screen is placed parallel to and 1.50 m from the grating. Calculate

(i) the spacing, in μm, of the lines of the grating,

spacing = ... μm

(ii) the angle θ to the original direction of the light at which the first order diffracted image is seen,

angle = ... °

(iii) the minimum length L of the screen so that both first order diffracted images may be viewed at the same time on the screen.

length = ... m

[5]

5 Two large flat metal plates A and B are placed 9.0 cm apart in a vacuum, as illustrated in Fig. 5.1.

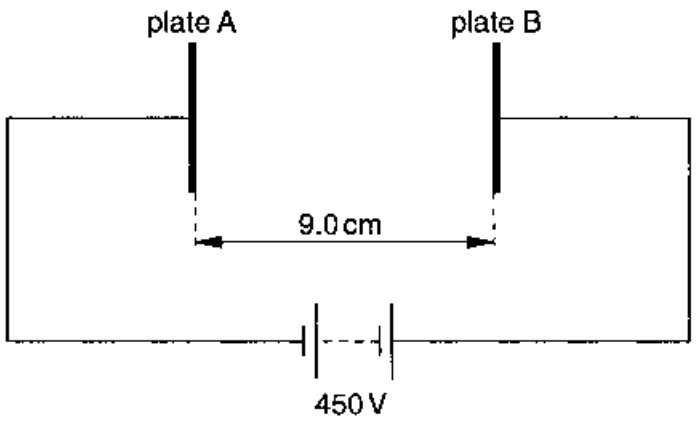

Fig. 5.1

A potential difference of 450 V is maintained between the plates by means of a battery.

(a) (i) On Fig. 5.1, draw an arrow to indicate the direction of the electric field between plates A and B.

(ii) Calculate the electric field strength between A and B.

field strength = ... $N C^{-1}$

[3]

For Examiner's Use

(b) An electron is released from rest at the surface of plate A.

(i) Show that the change in electric potential energy in moving from plate A to plate B is 7.2×10^{-17} J.

(ii) Determine the speed of the electron on reaching plate B.

speed = ... $m\,s^{-1}$
[4]

(c) On the axes of Fig. 5.2, sketch a graph to show the variation with distance d from plate A of the speed v of the electron. [1]

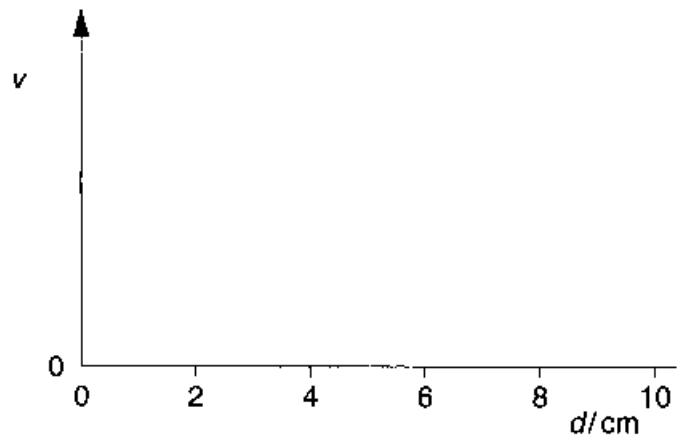

Fig. 5.2

[Turn over

6 One isotope of iron may be represented by the symbol

$$^{56}_{26}\text{Fe}.$$

(a) State, for one nucleus of this isotope,

(i) the number of protons,

number = ...

(ii) the number of neutrons.

number = ...
[2]

(b) The nucleus of this isotope of iron may be assumed to be a sphere of radius 5.7×10^{-15} m.

Calculate, for one such nucleus,

(i) the mass,

mass = ... kg

(ii) the density.

density = ... kg m^{-3}
[4]

(c) An iron ball is found to have a density of 7900 kg m^{-3}. By reference to your answer in **(b)(ii)**, suggest what can be inferred about the structure of an atom of iron.

.....

.....

..... [2]

7 An electric heater is rated as 240 V, 1.2 kW and has constant resistance.

(a) For the heater operating at 240 V,

(i) show that the current in the heater is 5.0 A,

(ii) calculate its resistance.

resistance = ... Ω
[4]

For Examiner's Use

(b) The heater in **(a)** is connected to a mains supply by means of two long cables, as illustrated in Fig. 7.1.

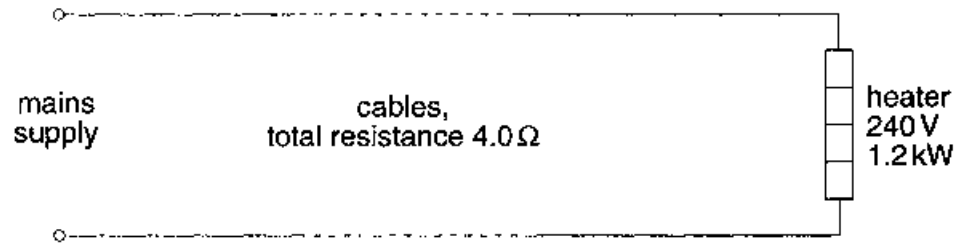

Fig. 7.1

The cables have a total resistance of 4.0 Ω. The voltage of the mains supply is adjusted so that the heater operates normally at 240 V. Using your answers in **(a)**, where appropriate, calculate

(i) the potential difference across the cables,

potential difference = ... V

(ii) the voltage of the mains supply,

voltage = ... V

[Turn over

(iii) the power dissipated in the cables.

power dissipated = ... W
[3]

(c) Using information from **(b)**, determine the efficiency ε at which power is transferred from the supply to the heater. That is, calculate

$$\varepsilon = \frac{\text{power dissipated in heater}}{\text{power input from supply}}.$$

efficiency = ...[2]